#	SPECIFICATIONS:	
1	DIMENSIONS AND TOLERANCES	ASME Y14.5-2009
2	DRAWING INTERPRETATION	ASME Y14.100-2017
3	STANDARD SIZES AND FITS	MACHINERY'S HANDBOOK 30TH EDITION
4	SHOP TOLERANCES AND DEFAULT REQUIREMENTS	HVCC AMT DRAWING #: H028P1

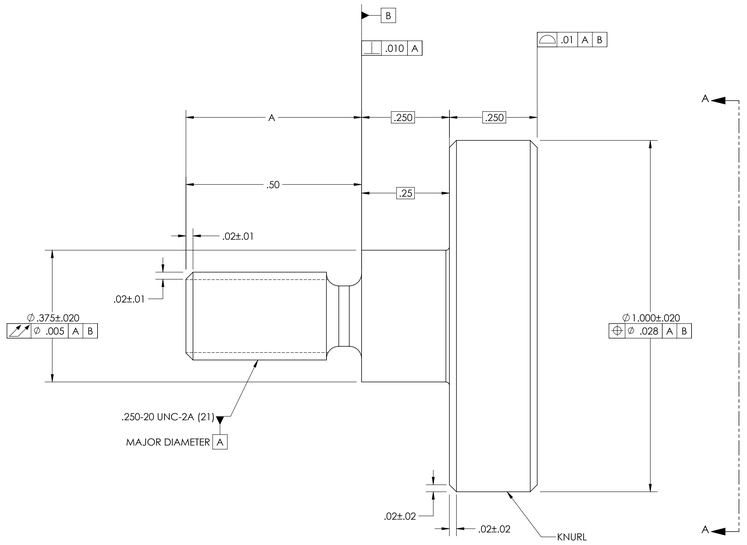

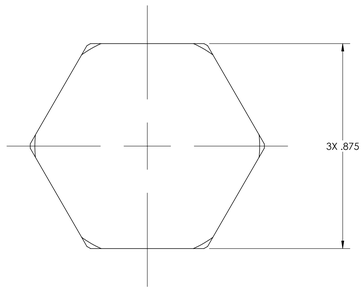

VIEW A

ALTERNATE PART

ITEM 4&5

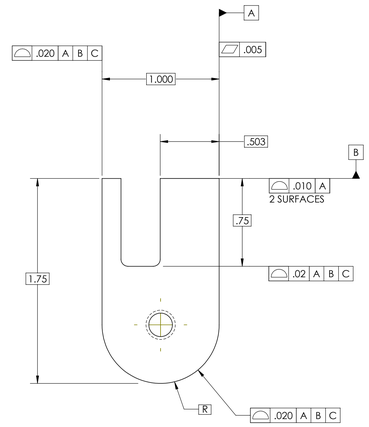

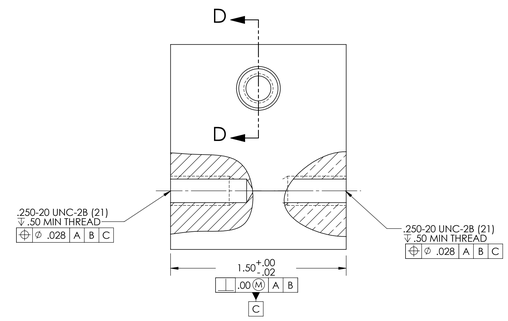

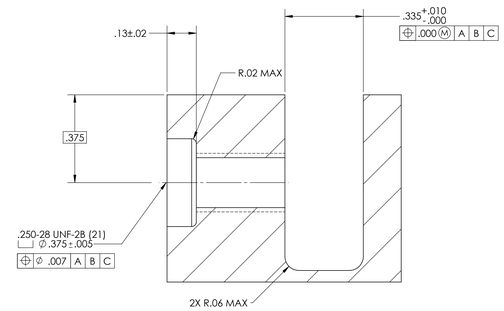

SECTION D-D

ITEM 3

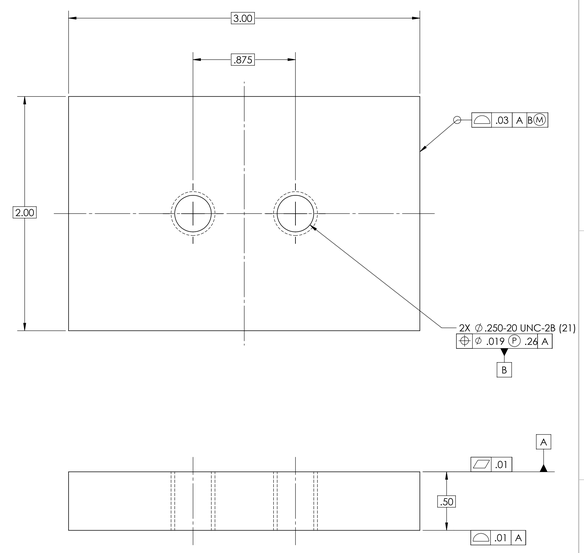

ITEM 1

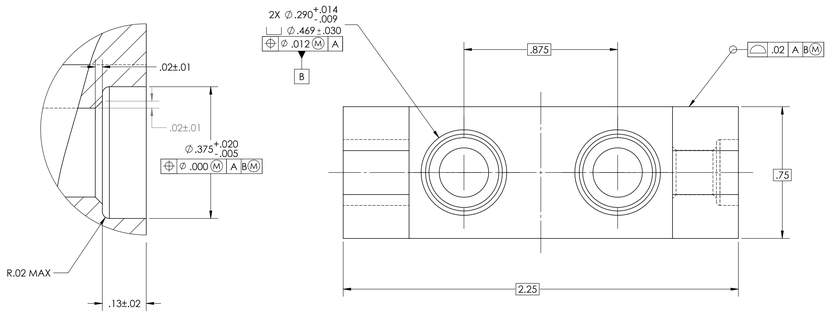

DETAIL C

SCALE 6 : 1

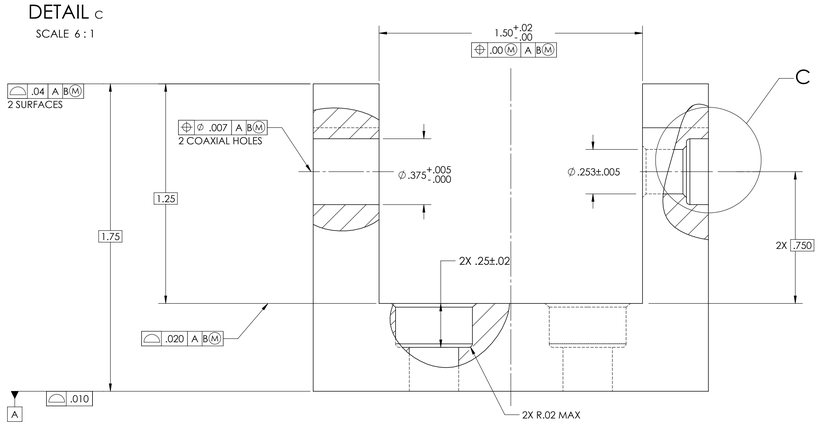

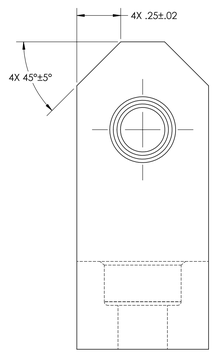

ITEM 2

NOTES:
1. HAND TIGHTEN.
2. TORQUE 30 FT-LBS.

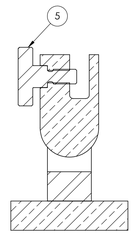

SECTION B-B

SCALE 1 : 1

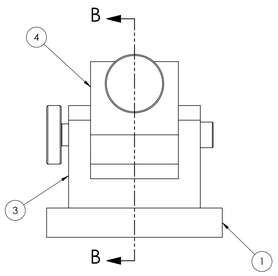

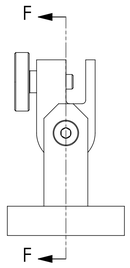

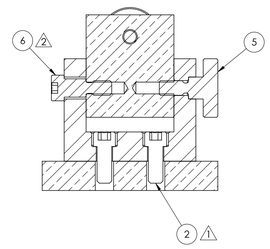

SECTION F-F

SCALE 1 : 1

ITEM NO.	PART NUMBER	MATERIAL	THREAD	DESCRIPTION	QTY.
1	H051P1	BRASS			1
2	H051P5	PURCHASE PART	1/4"-20	91251A539	2
3	H051P2	CAST ALLOY STEEL			1
4	H051P3	BRASS			1
5	H051P4	PLAIN CARBON STEEL			2
6	H051P6		1/4"-20	91259A576	1

R. DEAN ODELL
DESIGN & DRAFTING

DRAWING TITLE: MICROMETER HOLDER

DRAWING NUMBER: H051G2

DRAWN BY: R.ODELL

SIZE: E | CLASS: MFTS | REV: -

SCALE: 4:1 | 4/16/2022 | SHEET 1 OF 2