NOTES:

1. SURFACE ROUGHNESS EXCLUDING THREADS 63 MICROINCHES OR BETTER UNLESS OTHERWISE SPECIFIED.

REVISIONS				
ZONE	REV.	DESCRIPTION	DATE	APPROVED
B2	A	TOLERANCE WAS ±.002	5/19/2021	R.ODELL
A3, B2, B4	B	REMOVED MATERIAL CONDITION MODIFIER DATUM B	5/19/2021	R.ODELL
B2	C	COUNTERSINK WAS 82°	5/19/2021	R.ODELL

#	SPECIFICATIONS:	
1	DIMENSIONS AND TOLERANCES	ASME Y14.5-2009
2	DRAWING INTERPRETATION	ASME Y14.100-2017
3	STANDARD SIZES AND FITS	MACHINERY'S HANDBOOK 30TH EDITION
4	SHOP TOLERANCES AND DEFAULT REQUIREMENTS	HVCC AMT DRAWING #: H028P1

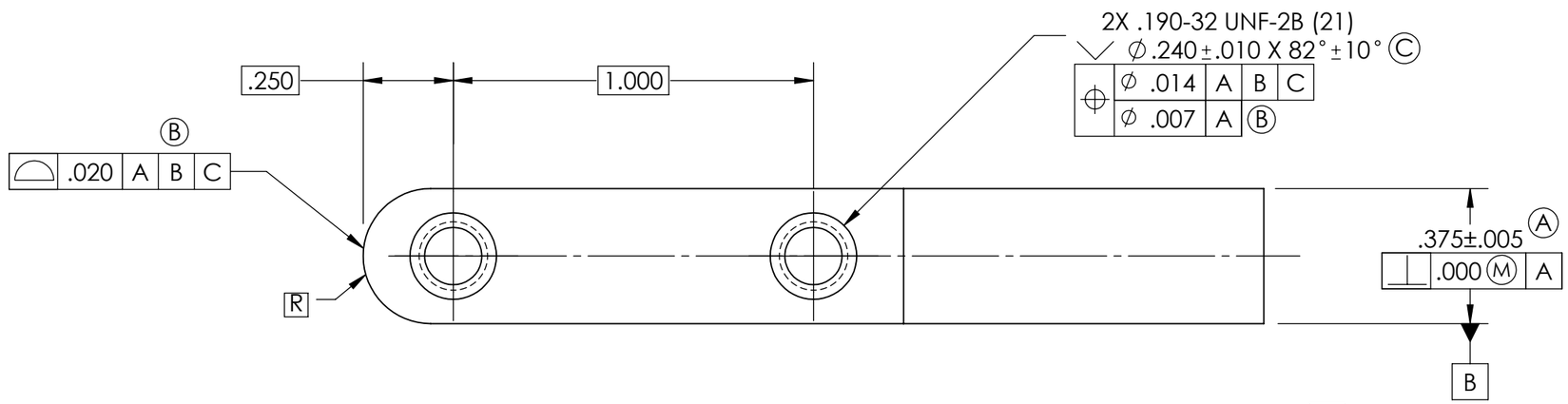

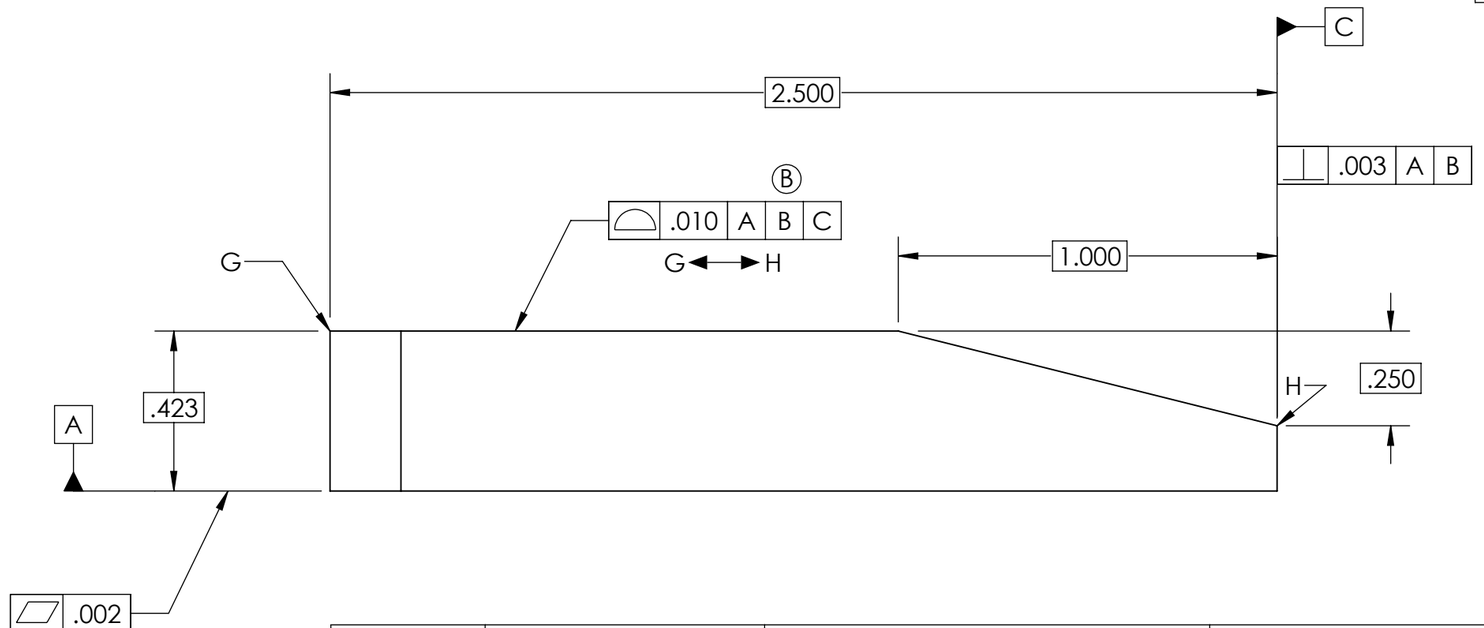

ITEM NO.	PART NUMBER	MATERIAL	DESCRIPTION	QTY.
1	H040P1	AISI 1020	JAW, CLAMP, THREADED HOLE	1

HUDSON VALLEY COMMUNITY COLLEGE

DRAWING TITLE: JAW, MACHINIST CLAMP

DRAWING NUMBER: H040P1

DRAWN BY: DEAN ODELL

SIZE	Class:	REV
B	MFTS	-
SCALE: 2:1	DATE: 5/19/2021	SHEET 1 OF 1